Circular column SK 100

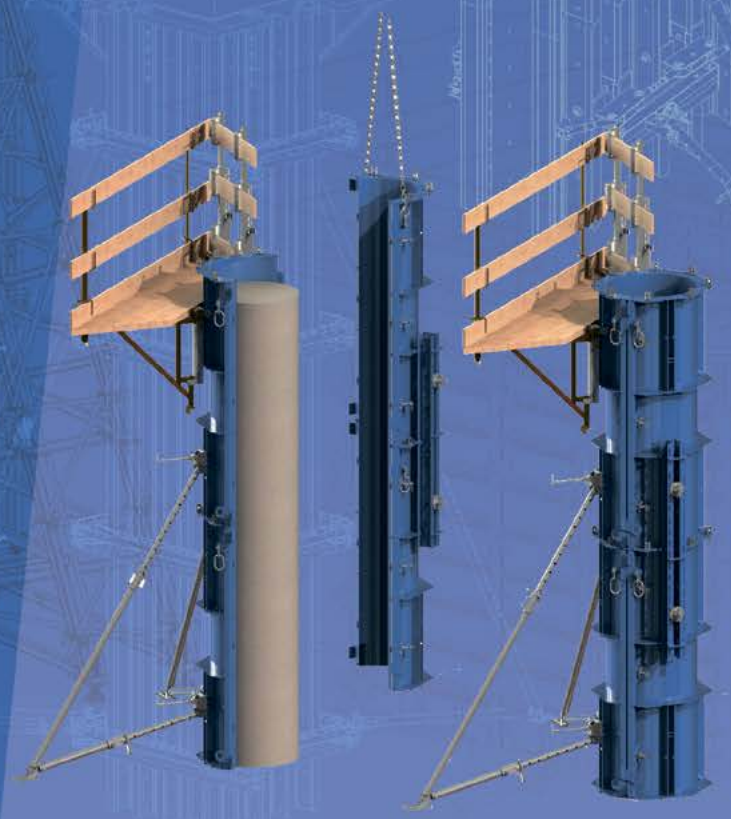

VARIANT

USER MANUAL

ISO 9001
BUREAU VERITAS
Certification
N° 00000

www.variant-factory.eu

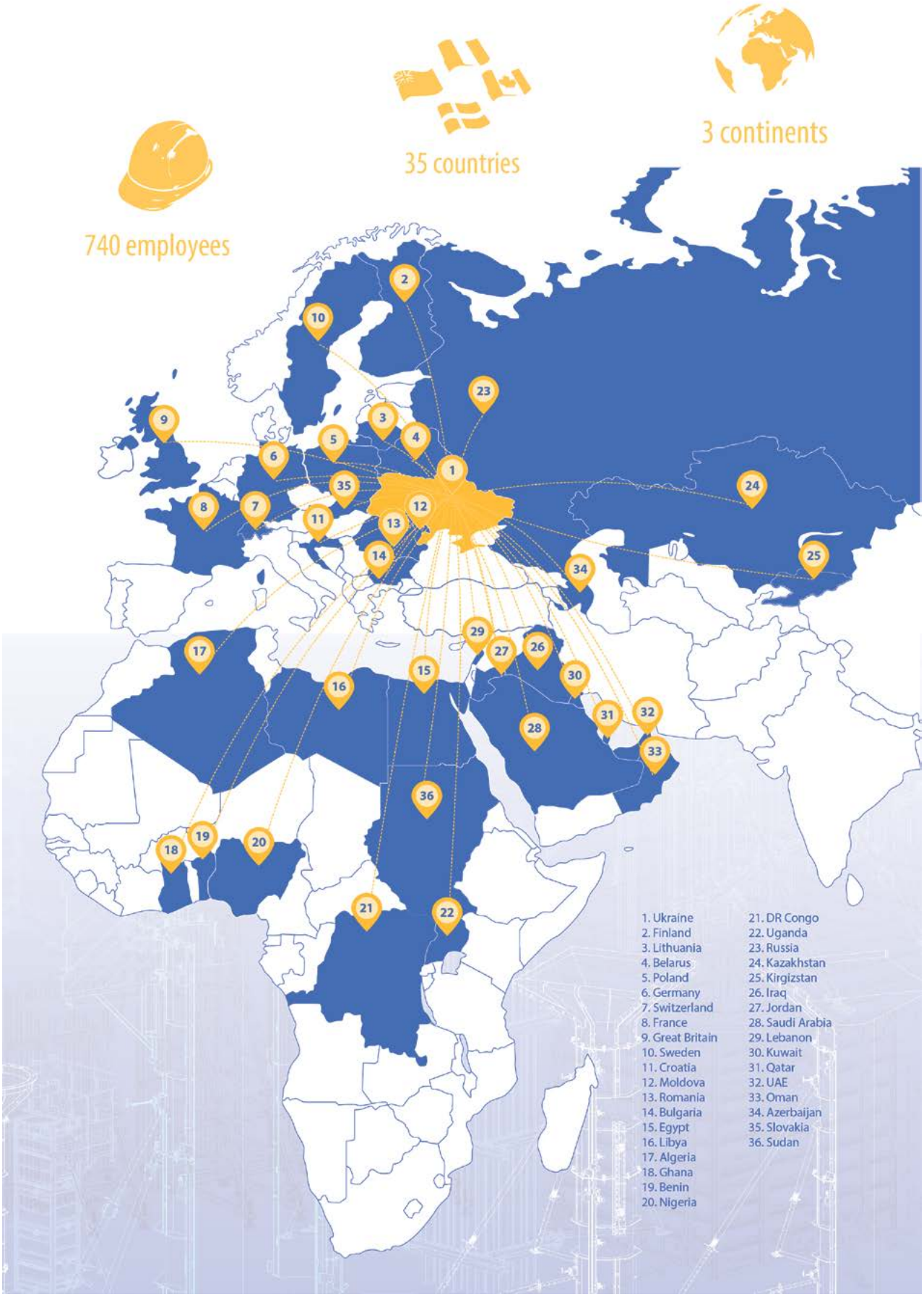
740 employees
35 countries
3 continents
1. Ukraine
2. Finland
3. Lithuania
4. Belarus
5. Poland
6. Germany
7. Switzerland
8. France
9. Great Britain
10. Sweden
11. Croatia
12. Moldova
13. Romania
14. Bulgaria
15. Egypt
16. Libya
17. Algeria
18. Ghana
19. Benin
20. Nigeria
21. DR Congo
22. Uganda
23. Russia
24. Kazakhstan
25. Kirgizstan
26. Iraq
27. Jordan
28. Saudi Arabia
29. Lebanon
30. Kuwait
31. Qatar
32. UAE
33. Oman
34. Azerbaijan
35. Slovakia
36. Sudan

Contents

GENERAL INSTRUCTIONS

This user manual (method statement) is aimed at everyone who will be working with the «VARIANT» product or system it describes. It contains information on how to set up this system, and proper use it.

All persons working with the product described herein must be familiar with the contents of this manual and with all the safety instructions it contains.

The customer is to ensure that the information materials provided by «VARIANT»are available to all users, and that they have been made aware of them and have easy access to them at the usage location.

Persons who are incapable of reading and understanding this booklet, or who can do so only with difficulty, must be instructed and trained by the customer.

Always observe all construction safety regulations and other safety rules applying to the application and using of our products in the country and/or region in which you are operating.

In the relevant technical documentation and formwork usage plans, «VARIANT» shows the workplace safety precautions that are necessary in order to use the «VARIANT» products safely in the usage situations shown. In all cases, users are obliged to ensure compliance with national laws, Standards and rules throughout the entire project and to take appropriate additional or alternative workplace safety precautions where necessary.

The customer is responsible for drawing up, documenting, implementing and continually updating a hazard assessment on every construction site. This document serves as the basis for the site-specific hazard assessment, and for the instructions given to users on how to prepare and use the system. It does not substitute for these, however.

This manual can also be used as a generic method statement or incorporated with a site-specific method statement.

The equipment/system must be inspected by the customer before use, to ensure that it is in suitable condition. Steps must be taken to rule out the use of any components that are damaged, deformed, or weakened due to wear, corrosion or rot.

The customer must ensure that this product is erected and dismantled, reset and generally used for its intended purpose under the direction and supervision of suitably skilled persons with the authority to issue instructions. These persons' mental and physical capacity must not in any way be impaired by alcohol, medicines or drugs.

The equipment/system must be assembled and erected in accordance with the applicable laws, Standards and rules by suitably skilled personnel of the customer's, having regard to any and all required safety inspections.

Many of the illustrations in this user manual show the situation during formwork assembly and are therefore not always complete from the safety point of view.

Combining our formwork systems with those of other manufacturers could be, but needs to be checked by customer compatibility «VARIANT» product/system with other independently under its responsibility.

It is not permitted to modify«VARIANT» products because of a safety risk.

Only original «VARIANT» components may be used as spare parts. Repairs may only be carried out by the manufacturer or authorized facilities.

We reserve the right to make alterations in the interests of technical progress.

WARNING NOTES

«VARIANT» products and systems must be set up in such a way that all loads acting upon them are safely transferred.

Do not exceed the permitted fresh-concrete pressures. Excessively high pouring rates lead to formwork overload, cause greater deflection and risk causing breakage.

The stability of all components and units must be ensured during all phases of the construction work.

All connections must be checked regularly to ensure that they still fit properly and are functioning correctly. It is very important to check all screw-type connections and wedge-clamped joins whenever the construction operations require (particularly after exceptional events such as storms), and to tighten them if necessary.

Remove any loose parts or fix them in place so that they cannot be dislodged or fall free.

It is strictly forbidden to weld «VARIANT» products – in particular anchoring/tying components, suspension components, connector components and castings etc. – or otherwise subject them to heating. Welding causes serious change in the microstructure of the materials from which these components are made. This leads to a dramatic drop in the failure load, representing a very great risk to safety. The only articles which are allowed to be welded are those for which the «VARIANT» literature expressly points out that welding is permitted.

If a person or object falls against, or into, the side-guard component and/or any of its accessories, the component affected may only continue in use after it has been inspected and passed by an expert.

Provide safe workplaces for those using the formwork (e.g. for when it is being erected/dismantled, modified or repositioned etc.). It must be possible to get to and from these workplaces via safe access routes.

Fire-sources are not permitted anywhere near the formwork. Heating appliances are only allowed if properly and expertly used, and set up a safe distance away from the formwork.

The work must take account of the weather conditions (e.g. risk of slippage). In extreme weather, steps must be taken in good time to safeguard the equipment, and the immediate vicinity of the equipment, and to protect employees.

Do not strike the formwork until the concrete has reached sufficient strength and the person in charge has given the order for the formwork to be struck.

When striking the formwork, never use the crane to break concrete cohesion. Use suitable tools such as timber wedges, special pry-bars or system features such as «VARIANT» stripping corners.

When striking the formwork, do not endanger the stability of any part of the structure, or of any scaffolding, platforms or formwork that is still in place.

Observe all regulations applying to the handling of formwork and scaffolding.

SYSTEM OVERVIEW

The circular column formwork SK100 has been designed for forming columns with circular cross-section. To form curved stop-end or oval column, the SK100 system can be combined with Varimax and circular formwork Ringform. The system consist of two semicircular formwork halves, with standard diameters from 30 cm up to 130 cm in a 10 cm grid. The semicircular elements are fixed to each other by means of integrated connectors (no additional fixation needed). 3 heights of the elements are available, 50 cm, 100 cm and 200 cm, which can be combined by means of vertical stacking to assemble any height required.

The «VARIANT» circular column system SK100 is used for forming:
- circular columns diameters 30-130 cm in a 10 cm grid;
- semi-circular columns and/or semi-circular wall ends.

Any custom size up to 200 cm in diameter can be produced on enquiry.

Permitted fresh-concrete pressure depending on column diameter:
- up to 600 mm - 150 kN/m^2;
- up to 800 mm - 100 kN/m^2;
- up to 1300 mm - 80 kN/m^2.

SYSTEM IN DETAIL

The following features are integrated in every column element SK100:

• connectors for joining together and vertical stacking the half-shells;
• crane-hoisting point;
• stacking lugs;
• centring mechanism.

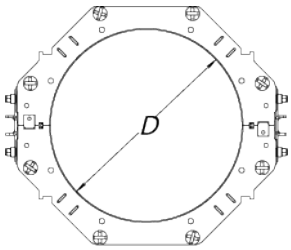

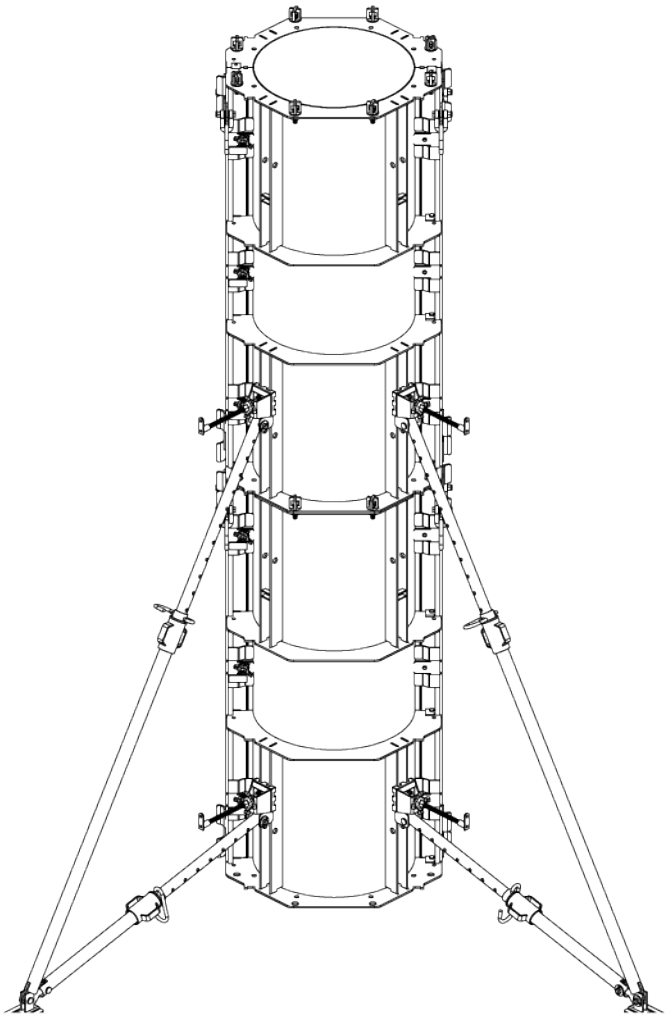

Height grid

• by combining panels with heights of 0.50 m, 1.00 m and 2.00 m, a 0,50 m height grid is obtained.
• Column elements 0.50 m may only be used as the top elements.

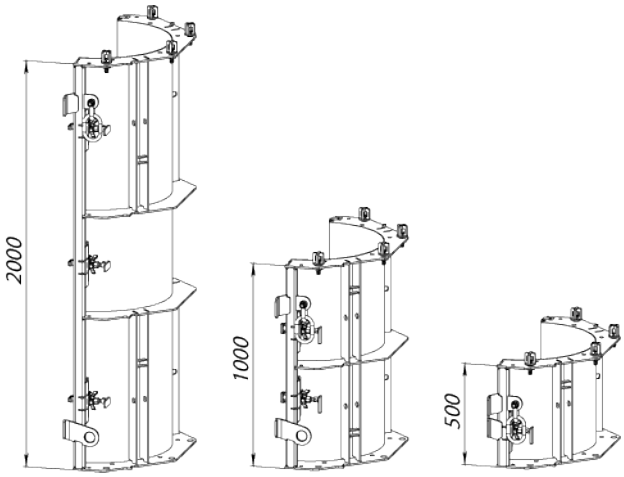

VERTICAL STACKING OF COLUMN ELEMENTS

• Place the column elements SK100 (A) on a flat surface

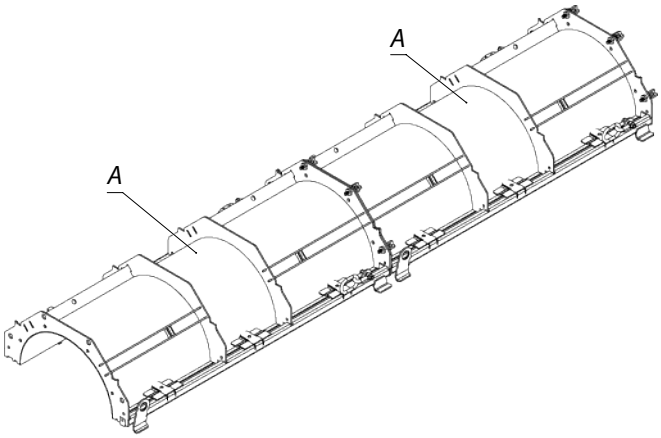

(A) Column element SK100

• Fix the connecting screws SK100 (B) between the elements to be stacked

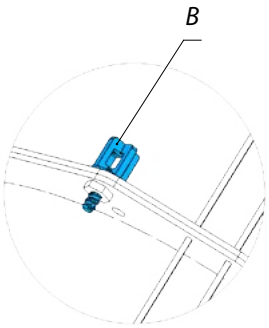

(B) Connecting screw SK100

To achieve a precision stacking join between the column elements SK100, we recommend fixing the connecting screws SK100 in the following order

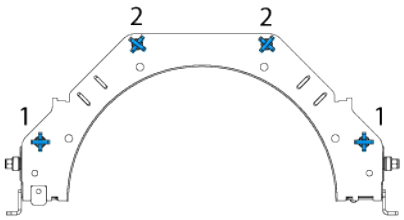

• Pre-assemble the other half-shell in the same way.

SHIFTING BY CRANE

Stand the pre-assembled formwork-halves on end, and secure them

• Use the crane to lift the first half of the formwork into the upright.
• Attach two supporting struts (C) to this formwork-half to prevent it from falling over.
Do not detach it from the crane until the panel struts are attached.

To save crane time, the panel struts can be attached to the half-shell while it is still lying on the ground

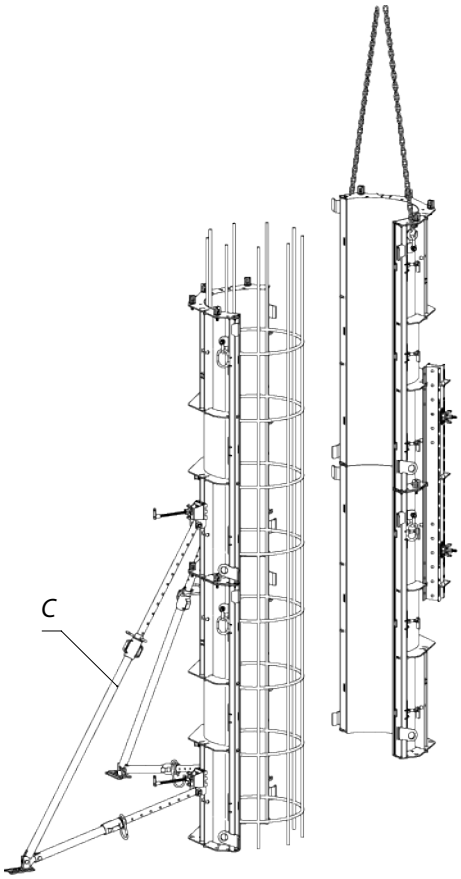

Join the formwork-halves together

• The integrated centering tool makes it easy to position the two halves correctly.
• Lift the second half of the formwork into the upright by crane.

(C) Supporting strut

• Link the formwork-halves with the integrated quick-acting connectors (D). Do not detach the second half-shell from the crane before both halves of the formwork are properly connected.

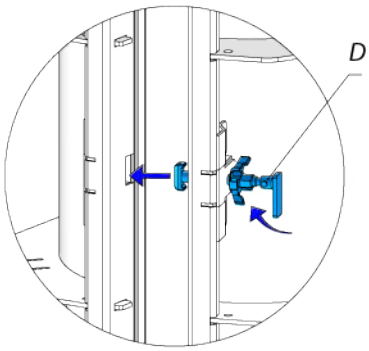

(D) Integrated quick-acting connector

Stripping and repositioning of the formwork is to be made in reverse order.

SUPPORTING AND ALIGNING ACCESSORIES

• Supporting struts secure the elements against wind loads, and make it easier to support and align the formwork.

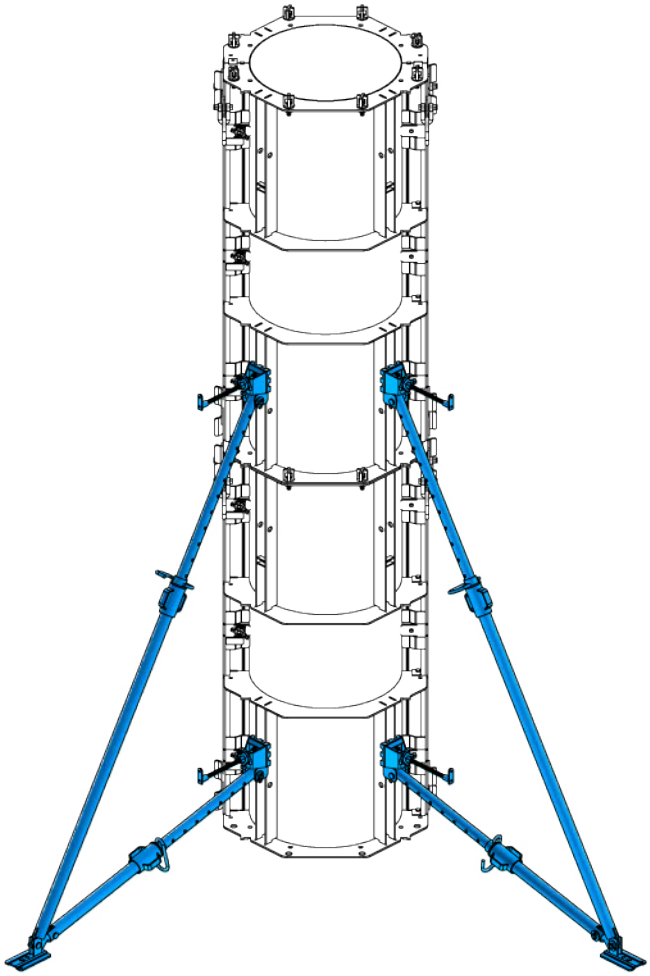

Number of supporting struts for a column set to be shored:

Formwork height [m]	Supporting strut		Adjustable plumbing strut
	340	540	
Up to 4.00	2		
Up to 5.50		2	
Up to 8.00	2		2

Fixation of the struts to the formwork

There are two possible ways of fixation of the supporting struts to the column formwork:
• Place the supporting strut head up against one of the clamping points on the column element SK100, and fix it in place with the star-shaped nut

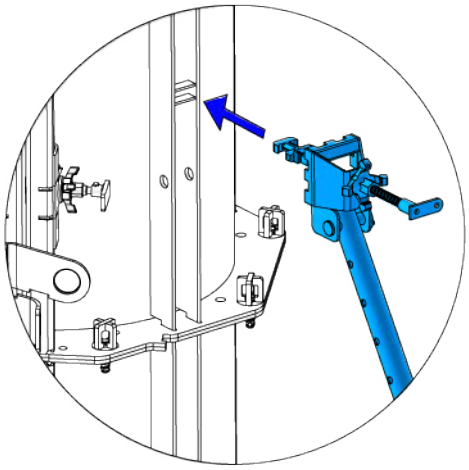

• Pin the supporting strut directly into the pin-holes on the vertical profile.

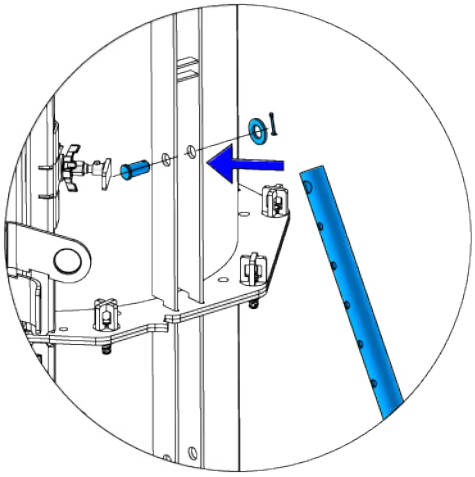

The formwork elements must be held stable in every phase of the construction work

SUPPORTING STRUTS

- Can be telescoped in a 8 cm grid
- Fine adjustment is made using screw-thread
- All parts are integrated - including the telescopic tube

Supporting strut 340

Retractable brace length, m	Allowable load	
	Pressure, kN	Stretching, kN
2,00	22,0	15,0
2,20	21,0	
2,40	17,5	
2,60	14,5	
2,80	12,5	
3,00	11,0	
3,20	9,5	
3,40	8,0	

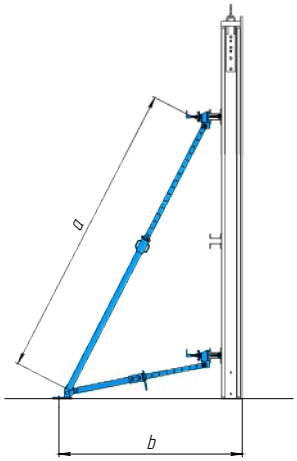

a ... 193.0 - 340.9 cm
b ... 128.3 - 181.6 cm

Supporting strut 540

Retractable brace length, m	Allowable load	
	Pressure, kN	Stretching, kN
3,20	30,0	30,0
3,40	29,0	
3,60	27,0	
3,80	25,0	
4,00	21,5	
4,20	19,0	
4,40	16,5	
4,60	15,0	
4,80	13,5	
5,00	12,0	
5,20	11,0	
5,40	9,0	
5,50	7,0	

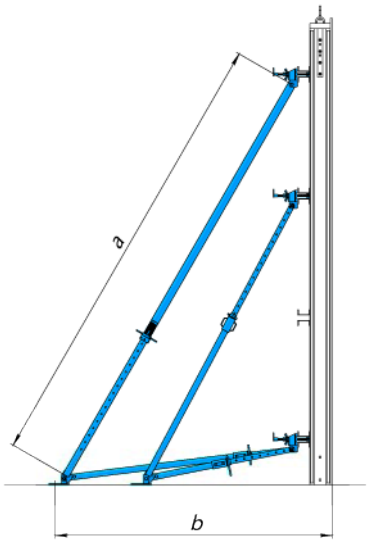

a ... 309.0 - 550.0 cm
b ... 224.2 - 281.6 cm

Adjustable plumbing strut

Consist of:
1 - Spindle head
2 - Spindle element without end-hinge plate
3 - Extension strut 2,40 m
4 - Extension strut 3,70 m
5 - Spindle element wth end-hige

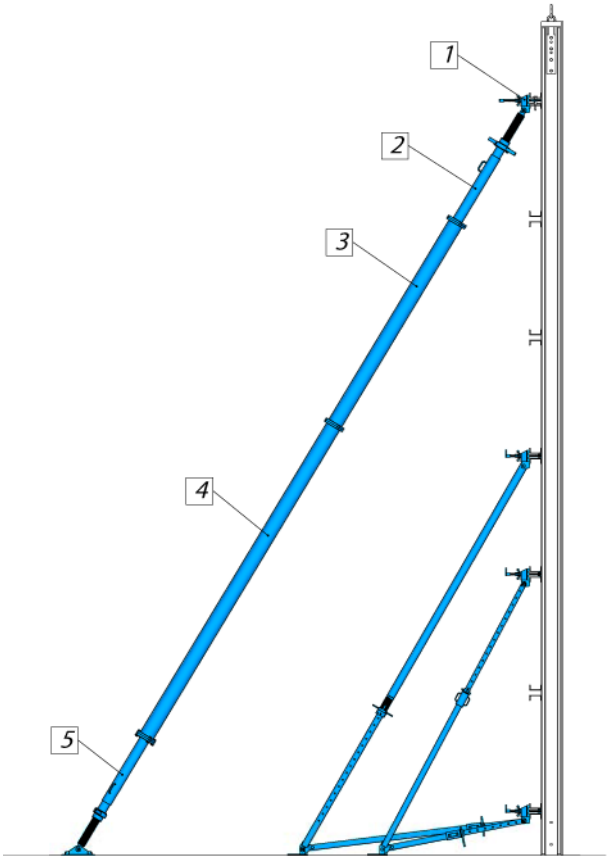

	Allowable axis load on pressure, kN		
6,0-7,4	40,0	40,0	27,8
7,1-8,5	40,0	38,2	24,3
8,4-9,8	40,0	35,6	21,7
9,7-11,1	40,0	31,7	19,0
10,8-12,2	40,0	27,8	16,1
12,1-13,5	34,2	24,1	13,4
13,4-14,8	27,1	21,5	12,2
14,5-15,9	20,8	17,5	9,5
	Allowable axis load on tention – 40 kN		

Intermediate parts	
short 2,40	long 3,70
-	1
2	-
1	1
-	2
2	1
1	2
-	3
2	2

The spindle head must be secured to the waling with a connecting pin and spring cotter. The length of the adjustable plumbing strut should be the same as the height of the formwork to be supported.

Footplate and anchorage

- Drilled holes in the footplates

Supporting strut 340; 540

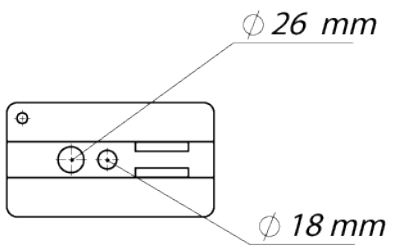

Adjustable plumbing strut
Fix with two anchor bolts

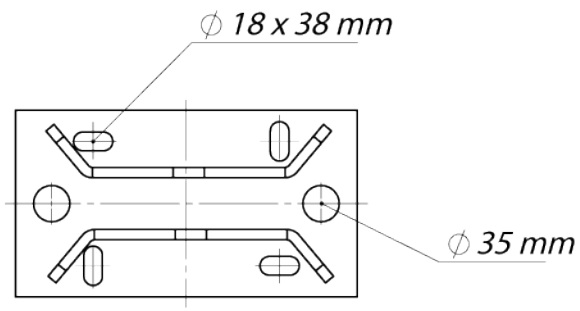

- Anchor the aligning accessories in such a way as to resist tensile and compressive forces.
- Required load-bearing capacity of anchor bolt is min. 13.5 kN
- Required concrete strength is 25 N/mm^2 (concrete C20/25)
- The anchoring bolt can be re-used several times over.

POURING PLATFORMS

- In conjunction with the Varimax wall bracket, the Bracket connection makes it possible to mount pouring platforms on the Column elements SK100.

- Hook the wall bracket adapter (A) into the column element SK100 (C) and fix it with a bolt and a pin (B)
- Using wall bracket bolts, fix the wall bracket into the wall bracket adapter
- Secure the wall bracket (D) with a spring cotter (E) at the top and the bottom.

Permitted service load: 1.5 kN/m^2

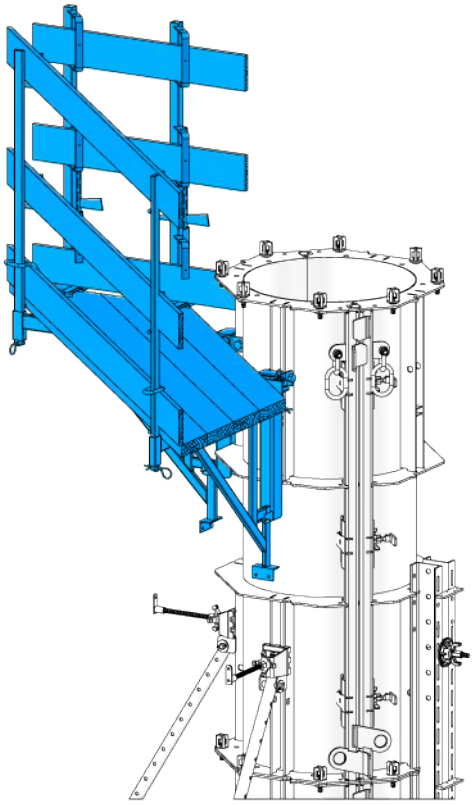

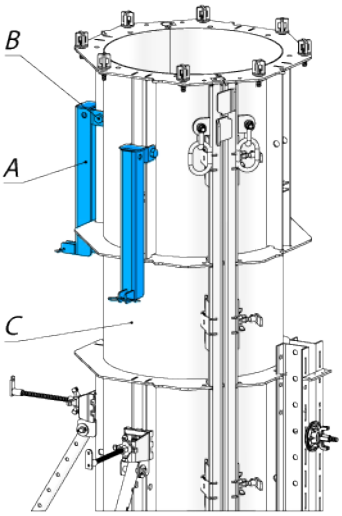

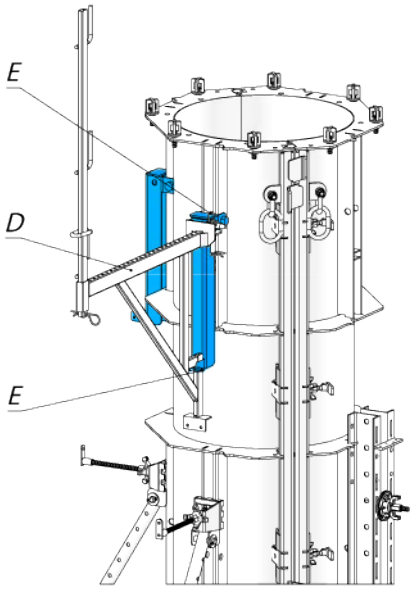

(A) Wall bracket adapter
(B) Bolt d25/110 + Linch pin 6x40
(C) Column element SK100
(D) Wall bracket Varimax
(E) Spring cotter

SK100 WITH FRAMED FORMWORK VARIMAX

- The column elements SK100 (A) are perfectly compatible with the Varimax panels (B) by means of integrated profile shape in circular column elements.

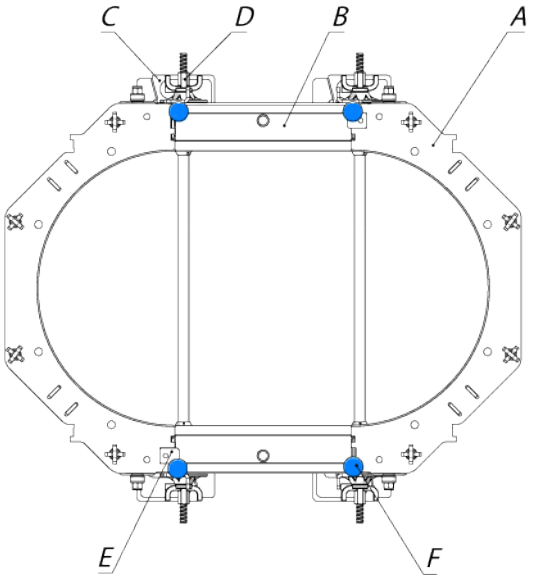

(A) Column element SK100
(B) Framed panel Varimax
(C) Clamp device Varimax
(D) Superplate 15
(E) Centering mechanism
(F) Hardboard strip

- The column elements SK100 are connected to the Varimax panels using standard framed-formwork connectors such as, the clamp device Varimax or adjustable clamp Varimax.
- The positions of the Varimax clamp devices (D) or adjustable clamps needed here are followed by the integrated quick-acting connectors.

The column elements SK100 come with a centering mechanism on one side. When they are clamped directly onto framed formwork panels, this centering mechanism must be dismounted.

- Dismount the centering mechanism (E)
- Add a hardboard strip (F)

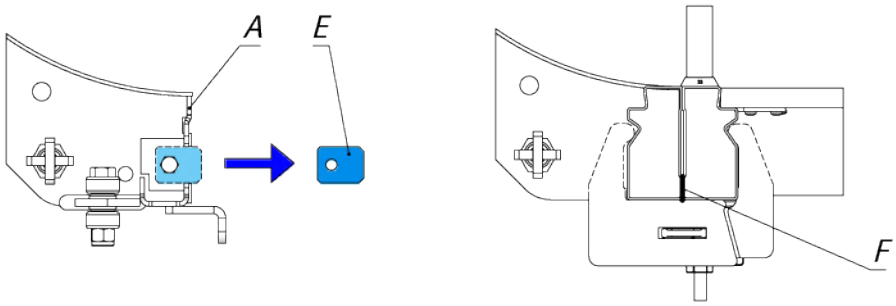

SK100 WITH CIRCULAR FORMWORK RINGFORM

- The column elements SK100 (A) used as stop-ends on circular formwork Ringform.
- The column elements SK100 are connected with the standard connectors for Circular formwork Ringform.
- The positions of the clamp devices needed here are followed by the integrated quick-acting connectors.

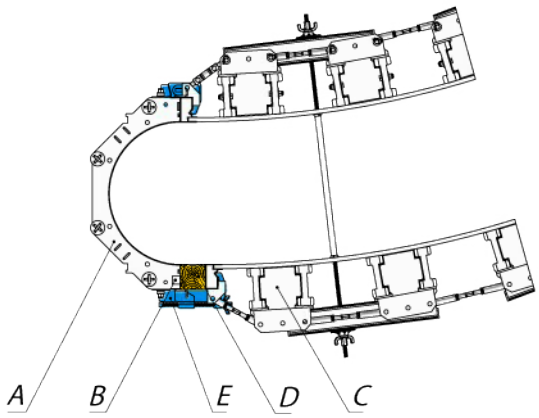

(A) Column element SK100
(B) Centering mechanism
(C) Circular formwork Ringform
(D) Timber filler
(E) Adjustable clamp Ringform

REINFORCEMENT OF CIRCULAR COLUMN ELEMENTS

Reinforce, when

- high (over 3.50 m) multi-element gangs, to stiffen the formwork when lifting it into the upright
- on multi-element gangs made by stacking many small column elements.

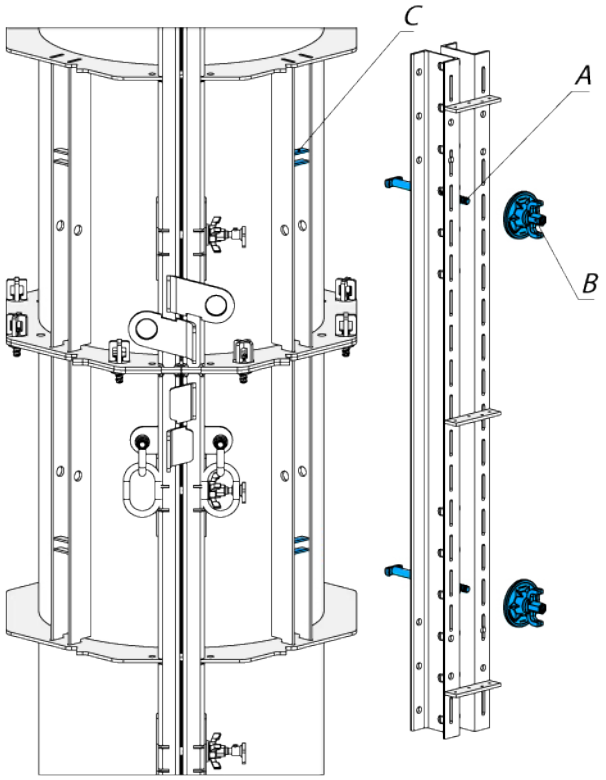

(A) Connection screw 10-16 (or 10-25)
(B) Superplate 15
(C) Column element SK100

Reinforcement with Waling12 (Waling 10)

- Do this with connection screws 10-16 (A) and superplates (B) fixed to the clamping points on the column elements (C) .
- In each case, there should be one fixing-point above the join, and one below it.
- Mount one Waling 12 formwork-half, on the connector-free side of the formwork.

The walings 12 (walings 10) should be long enough to overlap the column-element reinforcement ribs above and below the join.

In some cases, guide plate 1.50 m can be used instead of waling 12 (waling 10)

Attaching the supporting strut

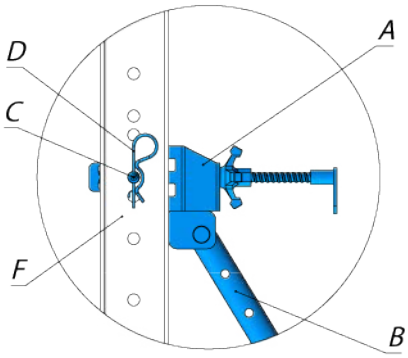

(A) Supporting strut head
(B) Supporting strut
(C) Connection pin
(D) Spring cotter
(F) Waling 12 (Waling 10)

Reinforcement with a screw-set M16x40

- Fit the screw-set M16x40(DIN 933 8.8) on the shell join.

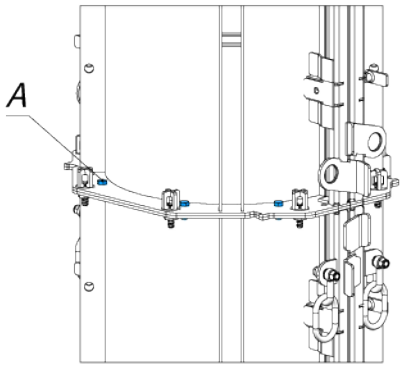

(A) Screw-set M16x40

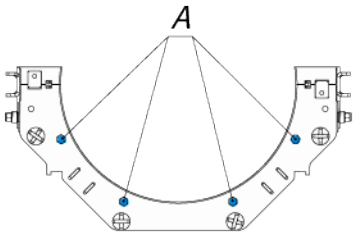

The screws must be fitted in the diam. 20 mm holes on the outside reinforcement ribs.

For each formwork-half, one screw-set M16x40 must be provided for every vertical stacking join.

TRANSPORTING, STACKING AND STORING

- The column elements SK100 can be hoisted either individually or in a stack.
- Max. 8 column elements SK100 may be stacked on top of one another outdoors – on flat, even surface – without being specially secured.

To protect the steel form-facing from corrosion, store the shells in a roofed-over place or under tarpaulins.

The integral stacking lugs on the column elements SK100 secure the stack against both lengthways and side-ways slippage.

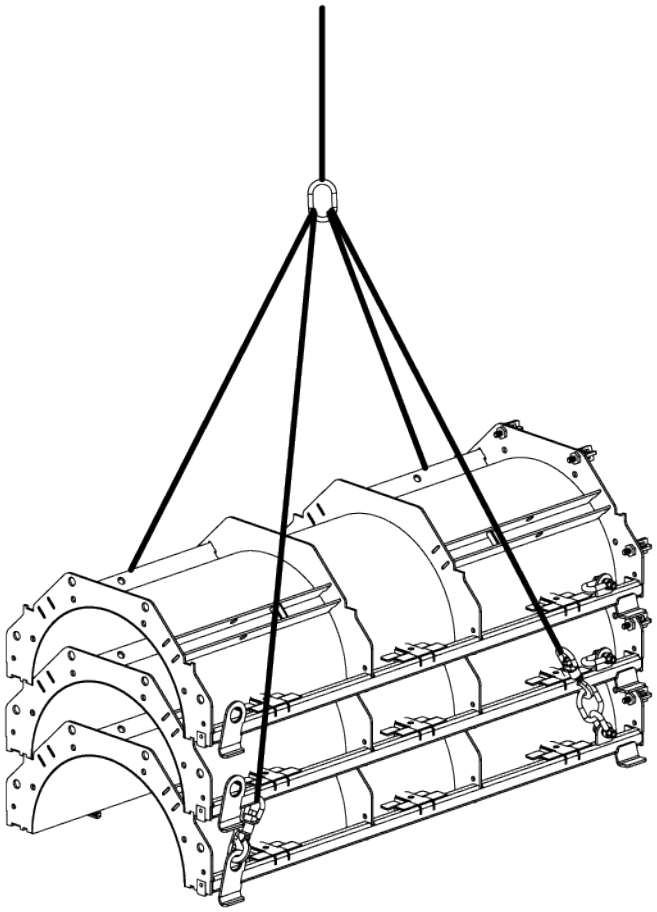

COMPONENT OVERVIEW

Item		[kg]	Article nº
Column element SK100	D 1.30x2.00m	336,00	14 100 000
	D 1.30x1.00m	197,40	14 102 000
	D 1.30x0.50m	114,45	14 104 000
	D 1.20x2.00m	318,15	14 106 000
	D 1.20x1.00m	211,05	14 108 000
	D 1.20x0.50m	107,10	14 110 000
	D 1.10x2.00m	302,40	14 112 000
	D 1.10x1.00m	190,05	14 114 000
	D 1.10x0.50m	100,80	14 116 000
	D 1.00x2.00m	246,75	14 118 000
	D 1.00x1.00m	157,50	14 120 000
	D 1.00x0.50m	88,20	14 122 000
	D 0.90x2.00m	226,80	14 124 000
	D 0.90x1.00m	138,60	14 126 000
	D 0.90x0.50m	80,85	14 128 000
	D 0.80x2.00m	199,50	14 130 000
	D 0.80x1.00m	116,03	14 132 000
	D 0.80x0.50m	68,25	14 134 000
	D 0.70x2.00m	186,90	14 136 000
	D 0.70x1.00m	102,90	14 138 000
	D 0.70x0.50m	59,85	14 140 000
	D 0.60x2.00m	164,85	14 142 000
	D 0.60x1.00m	101,33	14 144 000
	D 0.60x0.50m	54,08	14 146 000
	D 0.50x2.00m	154,35	14 148 000
	D 0.50x1.00m	94,50	14 150 000
	D 0.50x0.50m	54,60	14 152 000
	D 0.40x2.00m	139,65	14 154 000
	D 0.40x1.00m	85,05	14 156 000
	D 0.40x0.50m	48,30	14 158 000
	D 0.30x2.00m	117,60	14 160 000
	D 0.30x1.00m	69,30	14 162 000
Another diameters on inquiry	D 0.30x0.50m	39,90	14 164 000
Waling 12	1.75m	37,07	21 175 000
	2.00m	42,32	21 200 000
	2.25m	47,46	21 225 000
	2.50m	52,71	21 250 000
	2.75m	58,20	21 275 000
	3.00m	63,53	21 300 000

Item		[kg]	Article nº
Guide plate 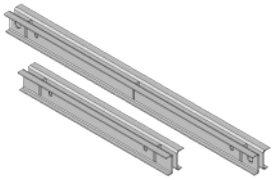	1.50m	18,85	11 914 000
Connection screw 	10-16 10-25	0,63 0,79	11 908 100 11 910 100
Wall bracket adapter 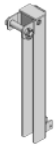		6,70	14 166 100
Wall bracket Varimax 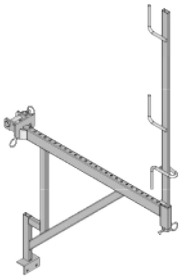		13,28	11 926 100
Guide rail clamp 		12,40	52 400 100

Item	[kg]	Article nº
Supporting strut 340 	37,38	11 928 100
Supporting strut 540 	56,91	11930100
Superplate 15 	1,22	95 200 100

Item	[kg]	Article nº
Adjustable plumbing strut 		
Spindle head 	3,48	11 932 100
Spindle element without end-hinge 	36,62	11 934 000
Extension strut 3.70 m	78,75	11 936 000
Extension strut 2.40 m 	54,13	11 938 000
Spindle element with end-hinge 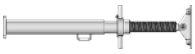	43,81	11 940 000